Rev.	Modification	Date	Resp.
-	-	-	-

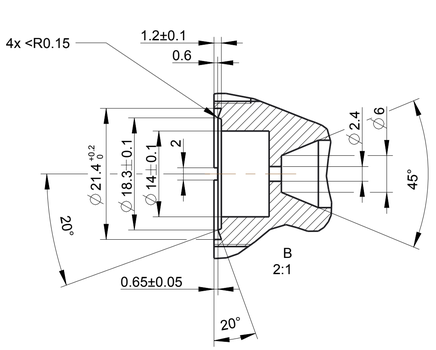

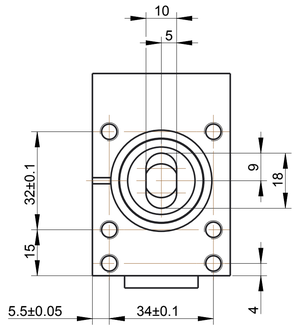

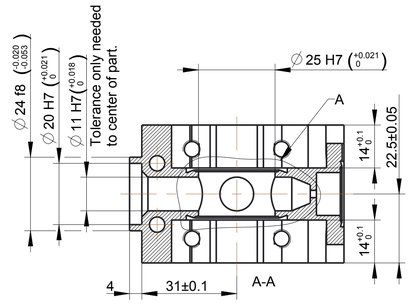

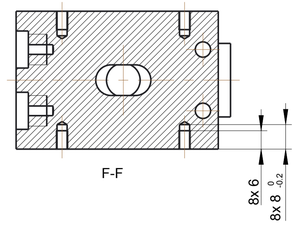

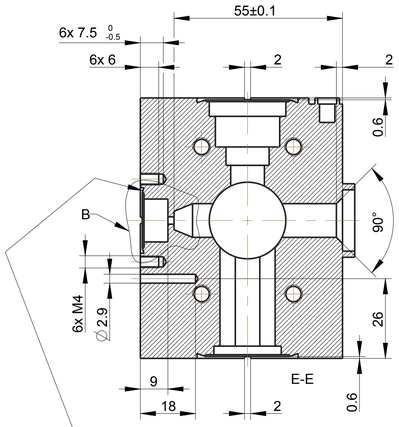

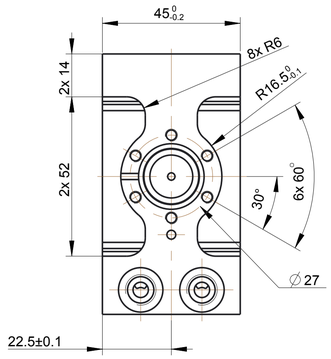

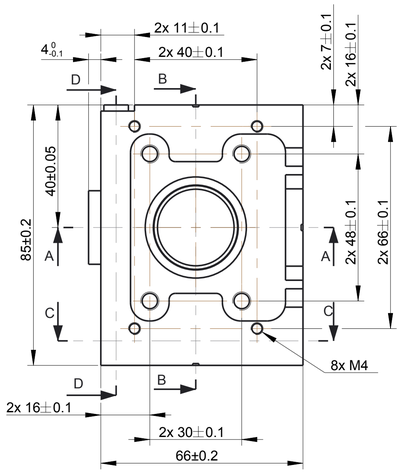

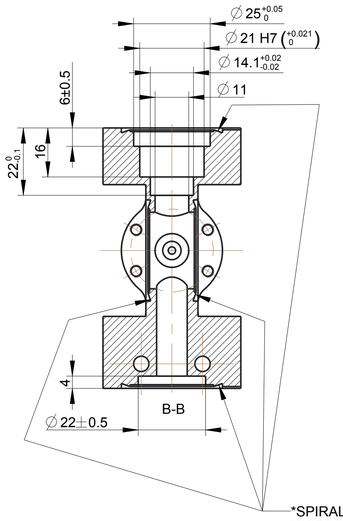

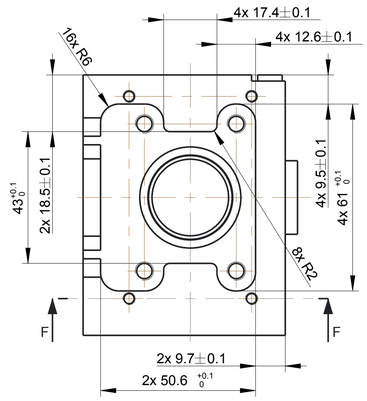

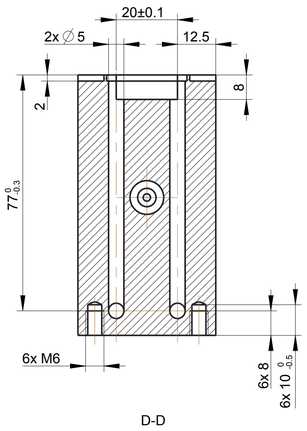

*SPIRAL FREE GRINDING.
UNIFORM CIRCULAR FINISH REQUIRED.
RANDOM SCRATCHES AND MACHINING MARKS
NOT PERMITTED.

*SPIRAL FREE GRINDING.
UNIFORM CIRCULAR FINISH REQUIRED.
RANDOM SCRATCHES AND MACHINING MARKS
NOT PERMITTED.

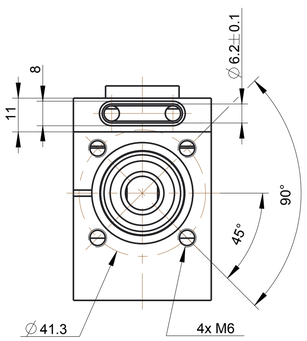

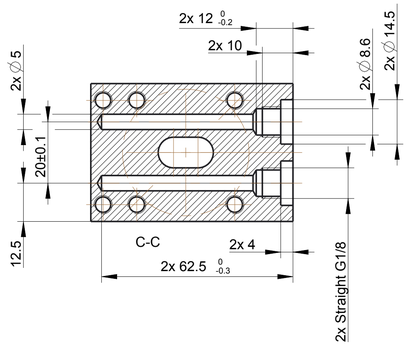

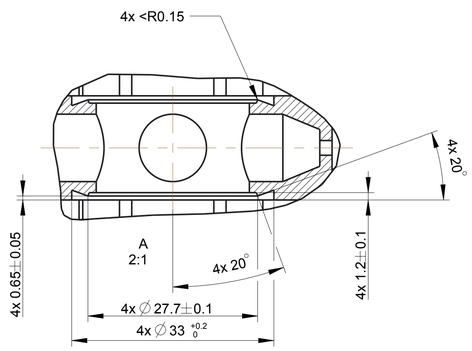

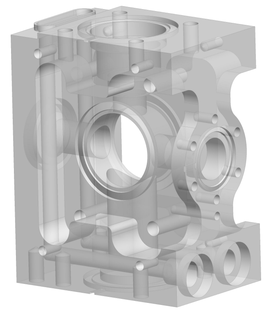

Where otherwise not stated:
Gen. tolerance according to ISO 2768-mK
Surface roughness Ra 3.2
All edges chamfered R=0.2±0.1
All dim. to be valid after surface treatm.
Detail must be clean at delivery

Surface treatment	-
Heat treatment	-
Material	TITANIUM GRADE 2

Designed date	Drawer	Designer	Scale
20150508			1:1

Name	Approved for	Sheet
R7 HEAD	concept	1(1)
	Drawing number	Revision
	D-034-0302	-

Modelfil: D0340302 PART - 9+ main
Ritningsfil: D0340302 A1