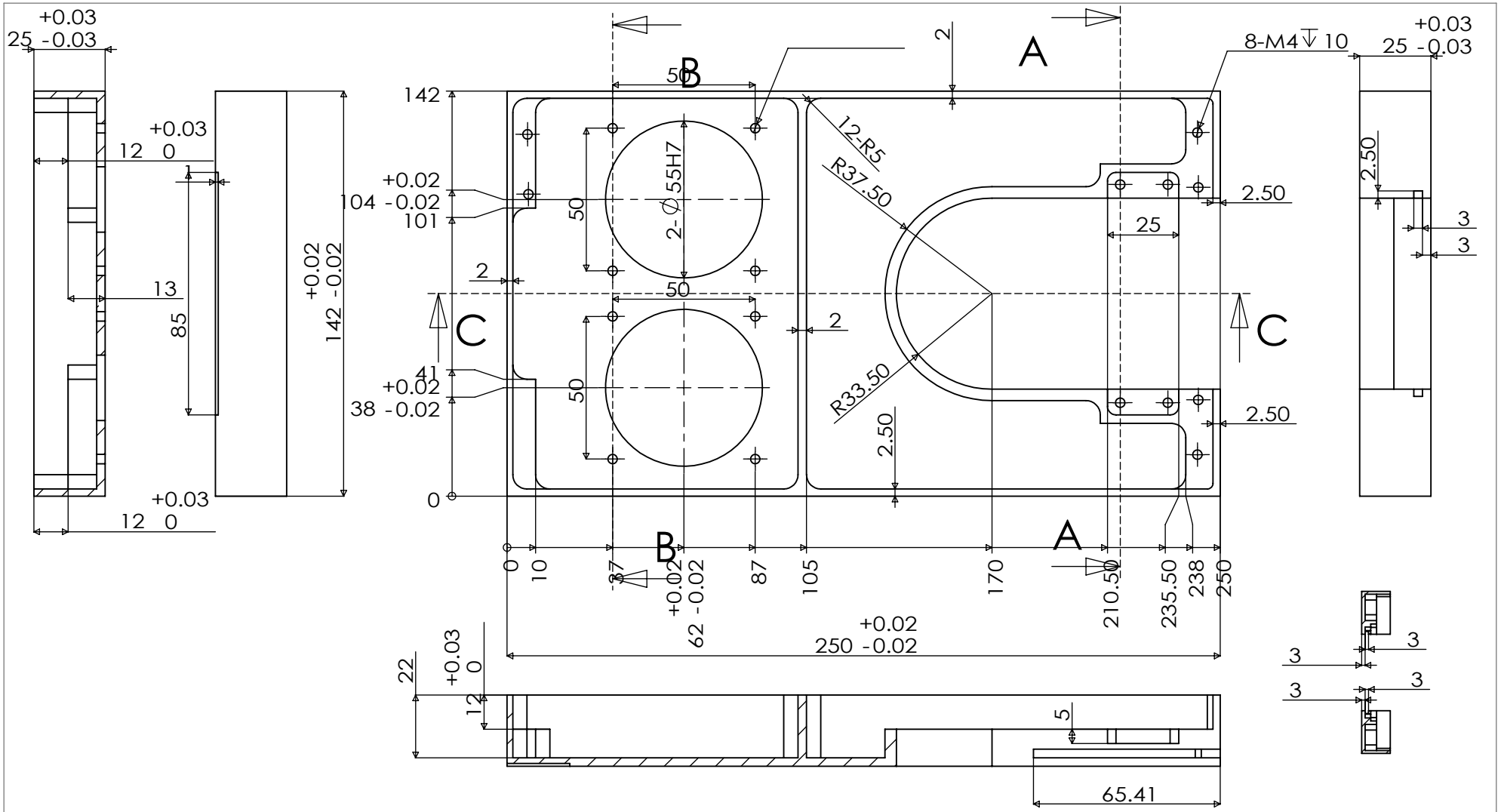

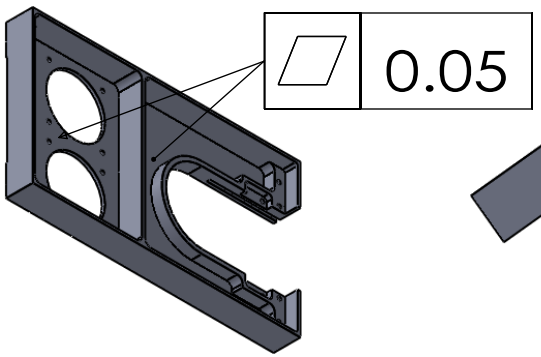

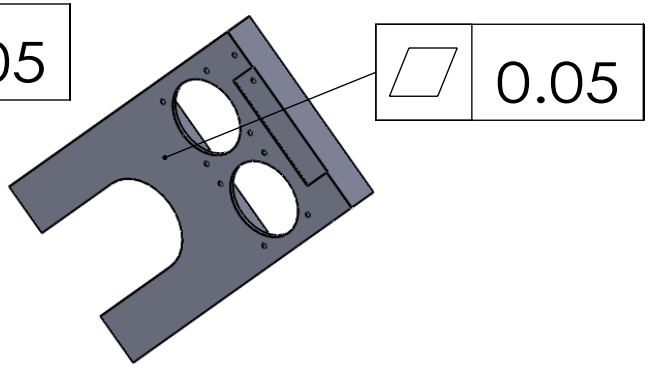

	NAME	DATE
DRAWN		
CHECKED		
ENG APPR.		
MFG APPR.		
Q.A.		

COMMENTS:

SIZE	DWG. NO.	REV.
A		
SCALE:1:2	WEIGHT:	SHEET 1 OF 1